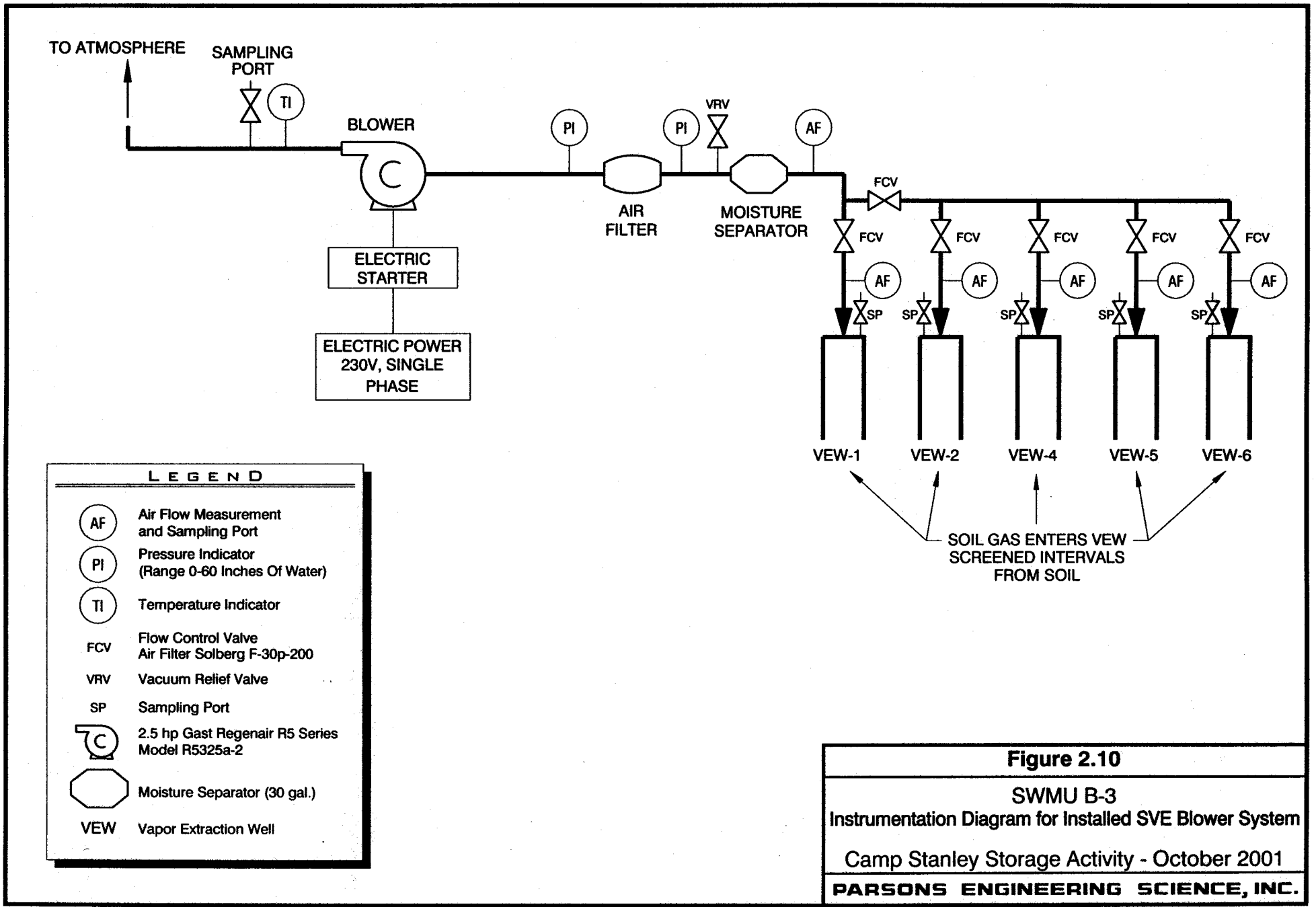

Figure 2.10

SWMU B-3
Instrumentation Diagram for Installed SVE Blower System

Camp Stanley Storage Activity - October 2001

PARSONS ENGINEERING SCIENCE, INC.

728487 CSSA-B3-DET.DWG