740999 CSSA_BLWR2.DWG

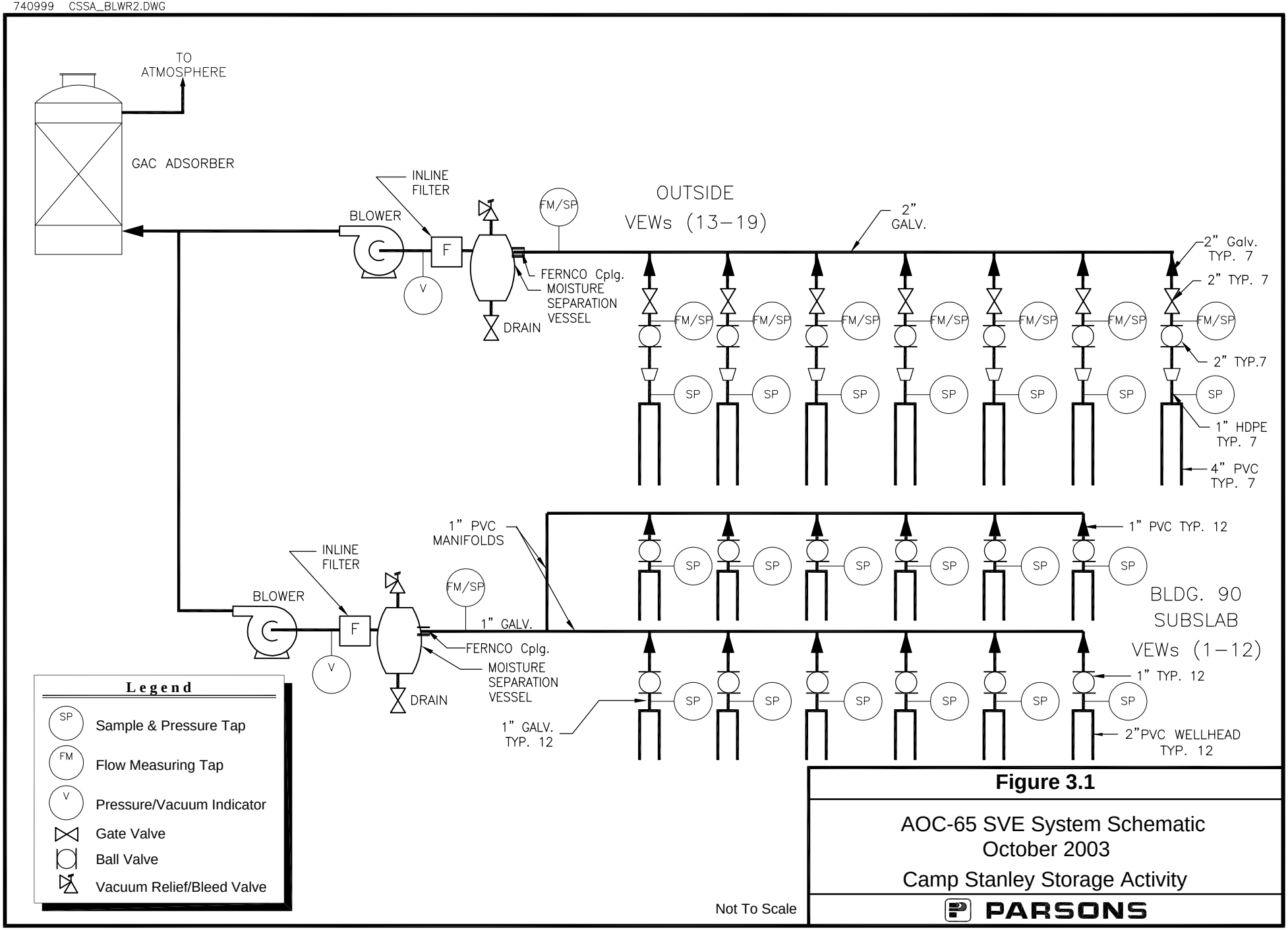

Figure 3.1

AOC-65 SVE System Schematic
October 2003

Camp Stanley Storage Activity