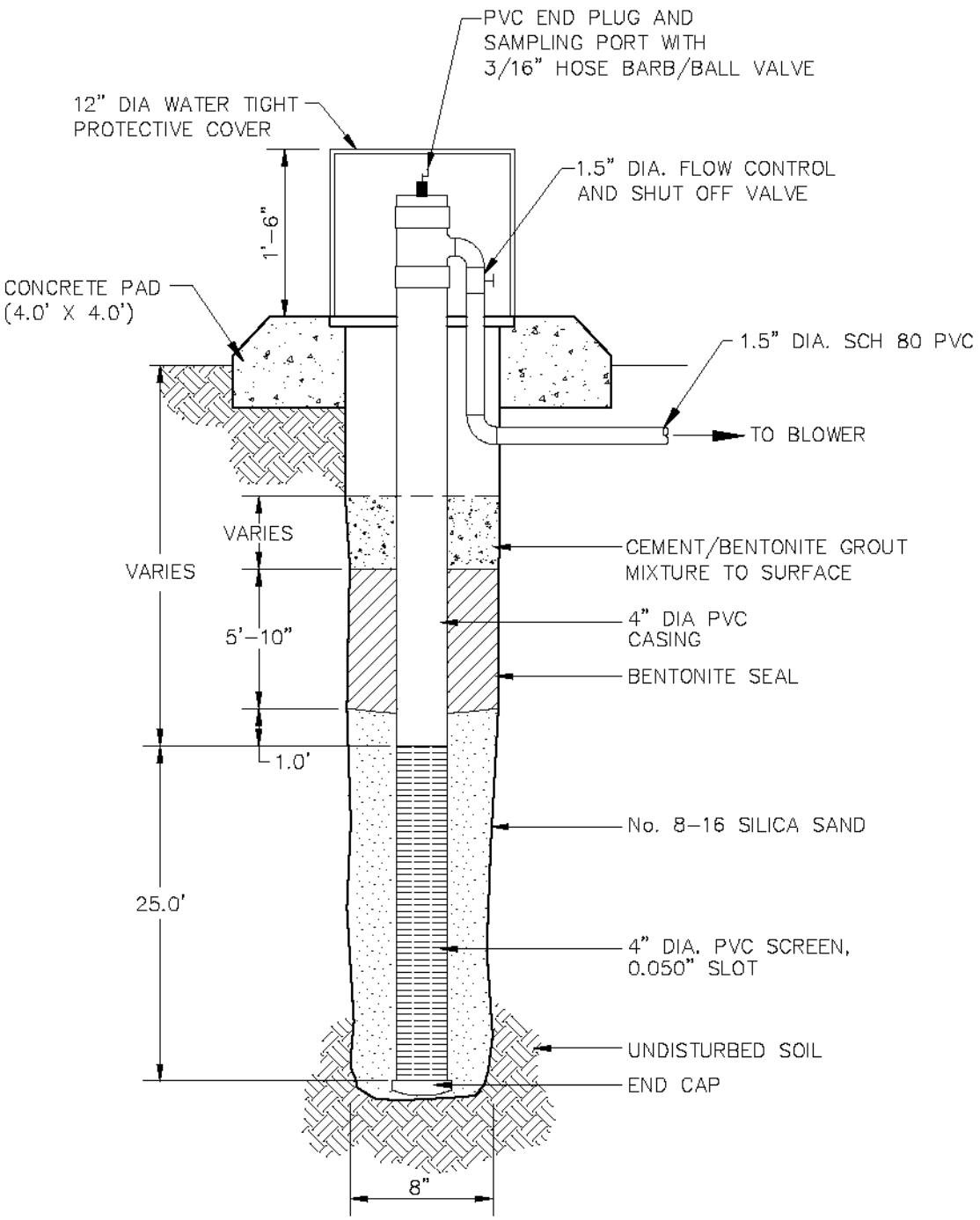

Not to Scale

Figure 3.6

Typical Vapor Extraction Well Construction Detail
AOC-65 SVE System
April 2002
Camp Stanley Storage Activity

PARSONS

740999-04000 CSSA_WELL-7.DWG